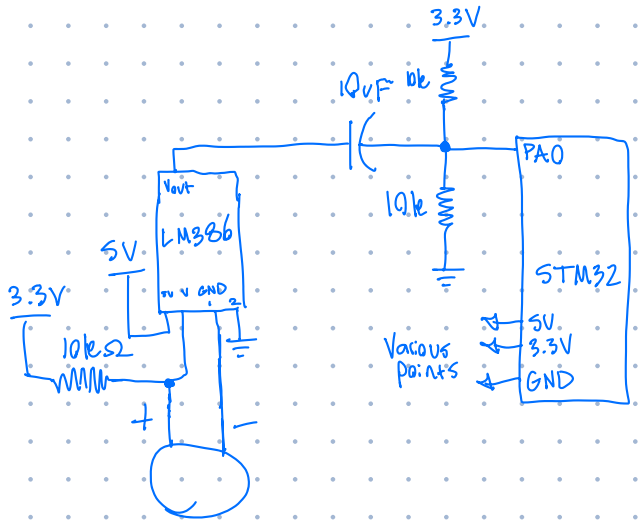


Electret

Can tell polarity as bottom looks like